Energy Methods

Reading : Chou & Pagano 7.1 – 7.6

VIII.1 Strain energy

When external forces are applied to a body, the body deforms. By Hooke's law the deformation generates internal forces, the stresses, which oppose this deformation. Hence the applied external forces have done work on the body by distorting it against a reactive force. The body has gained energy in the process, in the form of *strain energy.*

If we apply a normal stress σ_x only in the x direction, then the square $ABCD$ in figure 1 is deformed to $A'B'C'D'$. AB is displaced by u to $A'B'$, whilst CD is displaced by $u + \frac{\partial u}{\partial x}dx$ to $C'D'$. The stress on CD during this operation $\sigma dydz$ acts against a resistive force, and so does an ammount of work

$$\int_0^{\sigma_x} \sigma d\left(u + \frac{\partial u}{\partial x}dx\right) dydz$$

However the force on the other end, AB is directed in the other direction. Hence the increase in internal energy of this square $ABCD$ is

$$dU = \int_0^{\sigma_x} \sigma d\left(u + \frac{\partial u}{\partial x}dx\right) dydz - \int_0^{\sigma_x} \sigma dudydz = \int_0^{\sigma_x} \sigma \frac{\partial u}{\partial x}\, dxdydz$$

Note that although the square deforms in the y direction as well, this is perpendicular to the force applied, so no work is done.

Since $\frac{\partial u}{\partial x} = \frac{\sigma}{E}$ from Hooke's law, we can integrate this expression and find

$$dU = \frac{1}{2}\frac{\sigma_x^2}{E}\, dxdydz$$

The strain energy per unit volume, or strain energy density, is thus

$$U_0 = \frac{1}{2}\frac{\sigma_x^2}{E} = \frac{1}{2}\sigma_x\epsilon_x = \frac{1}{2}E\epsilon_x^2 \tag{VIII.1}$$

A similar expression can be written for shear stress :

$$U_0 = \frac{1}{2}\frac{\tau_{xy}^2}{G} = \frac{1}{2}\tau_{xy}\gamma_{xy} = \frac{1}{2}G\gamma_{xy}^2 \tag{VIII.2}$$

These expressions have been derived assuming applied strains in one direction only. However if we apply a strain in the x direction, followed by one in the y direction, the result should be the same as if the order was reversed. Hence we can add the contributions due to the strains in all directions :

$$U_0 = \frac{1}{2}\left(\sigma_x\epsilon_x + \sigma_y\epsilon_y + \sigma_z\epsilon_z + \tau_{xy}\gamma_{xy} + \tau_{xz}\gamma_{xz} + \tau_{yz}\gamma_{yz}\right) \tag{VIII.3}$$

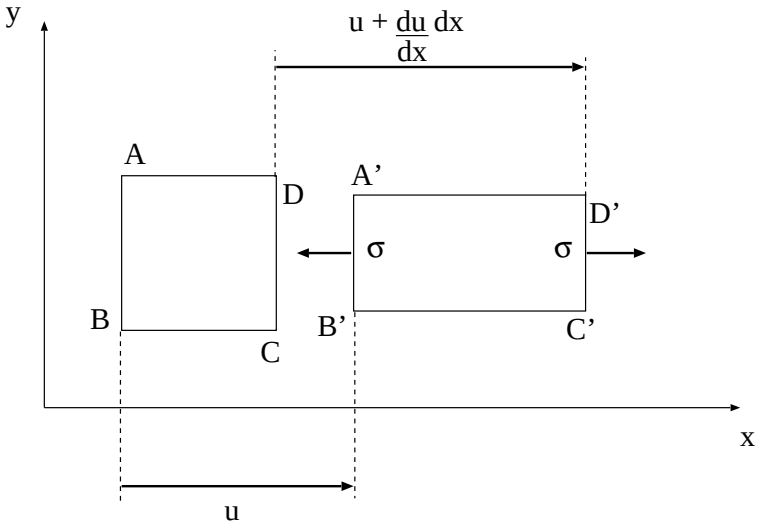

Figure 1: Deformation of a square $ABCD$ under a stress σ_x along the x-axis.

In terms of tensors we can write

$$U_0 = \frac{1}{2}\sigma_{ij}\epsilon_{ij} \tag{VIII.4}$$

We could write (VIII.3) entirely in terms of the strains alone, as

$$U_0 = \frac{1}{2}\left[\lambda\epsilon^2 + 2G(\epsilon_x^2 + \epsilon_y^2 + \epsilon_z^2) + 2g(\gamma_{xy}^2 + \gamma_{xz}^2 + \gamma_{yz}^2)\right]$$

By differentiating this expression, we see that

$$\frac{\partial U_0}{\partial \epsilon_x} = \sigma_x$$

and in general the stress is obtained by differentiating U_0 w.r.t. the corresponding strain.

[Q.VIII.1] Express equation (VIII.3) entirely in terms of the stresses, and show that the strains can be obtained by differentiating this expression w.r.t. the corresponding stresses.

VIII.2 Principle of Virtual Work

A lever is loaded with weights as shown in figure 2, with a 6kg weight at 40cm from the fulcrum, and a 10kg weight 20cm from the fulcrum. The lever is balanced by a weight W attached via a pulley at the end. What is W?

To solve this problem, let us assume that the weight is displaced downwards by an arbitary distance – say 4mm. The two weights will be lifted by 2mm and 1mm

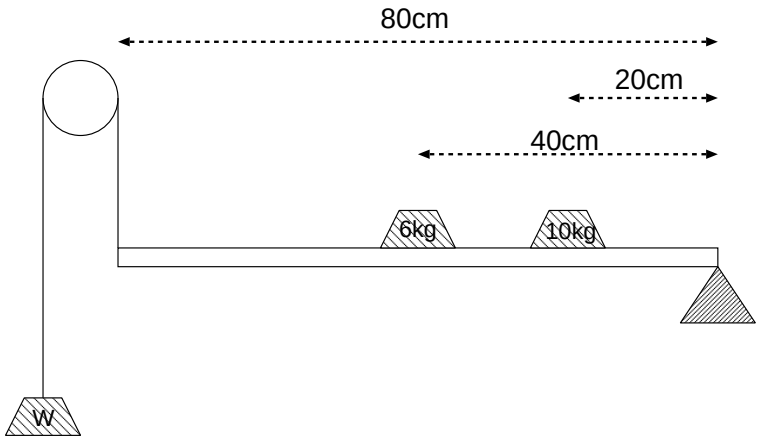

Figure 2: Lever loaded with weights, balanced by a weight W attached via a pulley

respectively. However the total potential energy has to remain the same. Thus

$$-4W + 2 \times 6 + 1 \times 10 = 0$$

giving $W = 5.5$kg.

In solving this problem we have made use of the *principle of virtual work*. The system has been displaced by a small ammount, often referred to as a *virtual displacement*, which does not affect the forces exerted on it. The work done by the forces in making this displacement is known as the *virtual work*. This can be applied to elasticity problems as well. We can represent a small, virtual change in a quantity Q by writing it as δQ – this is often referred to as the *differential* of Q. So for example the virtual displacements

$$\delta u, \qquad \delta v, \qquad \delta w$$

are the conceptual displacement around an equilibrium position. The virtual displacement

1. must be small enough to be covered by the theory of linear elasticity
2. must agree with any imposed real displacement at the boundary

In addition all imposed forces (surface and boundary) are constant in magnitude and direction. These virtual displacements give rise to a virtual strain field $\delta\epsilon_x$. In most respects δ can be regarded as a derivative operation, so we can write

$$\delta\epsilon_x = \delta\left(\frac{\partial u}{\partial x}\right) = \frac{\partial}{\partial x}(\delta u)$$

We can express the variation of the strain energy as

$$\delta U_0 dxdydz = \sigma_x\delta\epsilon_x + \sigma_y\delta\epsilon_y + \sigma_z\delta\epsilon_z + \tau_{xy}\delta\gamma_{xy} + \tau_{xz}\delta\gamma_{xz} + \tau_{yz}\delta\gamma_{yz}$$

which if integrated over the whole body gives

$$\int_V \delta U_0 dV = \delta \int_V U_0 dV = \delta U$$

where U is the total internal energy of the body. In writing this we have swapped δ and $\int$ around. We say that the operations δ and $\int$ are *commutative.* Meanwhile the virtual work done by the external forces is given by

$$\delta W = \int_S \left(\overline{X}\delta u + \overline{Y}\delta v + \overline{Z}\delta w\right) dS$$

We could also include in W a contribution due to the work done by body forces. The statement that the total virtual work for the whole body is zero now takes the form

$$\delta\Pi = \delta\left(U - W\right) = 0 \tag{VIII.5}$$

This powerful result is discussed in the next section.

VIII.3 Energy Minimisation (non-examined)

Equation (VIII.5) contains two terms. The first, U is the internal or strain energy, there due to the deformation of the body being considered. The second, W is the potential energy associated with the surface and body forces producing this deformation. The term $U - W$ is therefore the total potential energy of the system. We are familiar with the concept that $\frac{df}{dx} = 0$ represents a maximum or minimum value of f, often referred to as an extremum. Similarly $\delta\Pi = 0$ represents an extremum – in fact a minimum – of Π. If we have an estimate Π_e for the true solution Π_0 then

$$\Pi_e = \Pi_0 + \delta\Pi$$

and our estimate *is* the solution where $\delta\Pi = 0$. The expression for Π involves an integral, which is why we have to use methods from the *calculus of variations* to evaluate it. In general, if F is a function of y and y', then

$$\delta F = \frac{\partial F}{\partial Y}\delta y + \frac{\partial F}{\partial y'}\delta y'$$

a result which is analogous to the chain rule in ordinary calculus. When this is applied inside an integral, the following happens :

$$\delta \int F(x, y, y')dx = \int \delta F dx = \int \left[\frac{\partial F}{\partial y}\delta y + \frac{\partial F}{\partial y'}\delta y'\right] dx$$

But the second term can be integrated by parts to give

$$\int \left[\frac{\partial F}{\partial y'}\delta\frac{dy}{dx}\right] dx = \int \left[\frac{\partial F}{\partial y'}\frac{d\delta y}{dx}\right] dx = -\int \frac{d}{dx}\left(\frac{\partial F}{\partial y'}\right)\delta y\, dx$$

(the first term in the integration by parts is zero because of the boundary conditions). Thus

$$\delta \int F(x, y, y')dx = \int \left[\frac{\partial F}{\partial y} - \frac{d}{dx}\left(\frac{\partial F}{\partial y'}\right)\right] \delta y dx$$

and the requirement $\delta \int F(x, y, y')dx = 0$ leads to

$$\frac{\partial F}{\partial y} - \frac{d}{dx}\left(\frac{\partial F}{\partial y'}\right) = 0$$

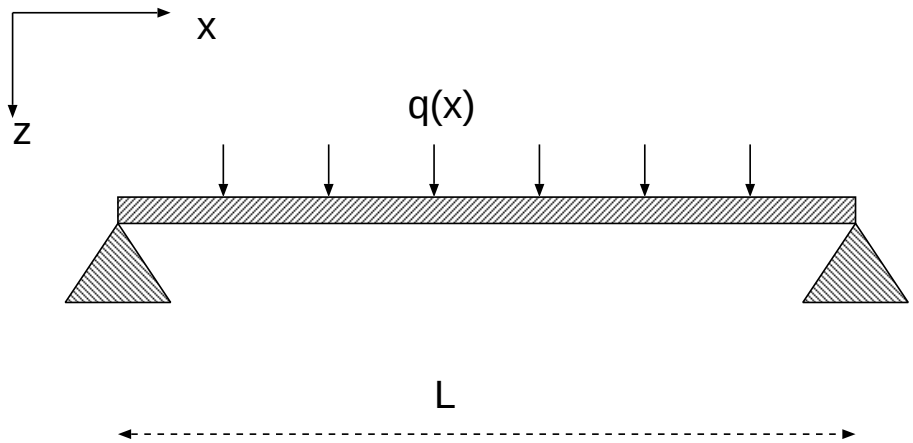

Figure 3: Beam supported at each end, subject to an applied load $q(x)$.

Let us apply this to the following problem : a beam (figure 3) is supported at each end, and is subjected to a load $q(x)$ along its length. What is the governing equation for this problem?

We assume that the only stresses in the beam are due to pure bending, and that cross-sections remain plane after the distortion. Thus the only stress component is

$$\sigma_x = \frac{Mz}{I}$$

where M is the applied moment and I the moment of inertia of the cross-section about the y-axis :

$$I = \iint z^2 dydz$$

From simple beam theory the moment

$$M = \frac{EI}{R} \simeq EI\frac{d^2w}{dx^2}$$

where R is the radius of curvature of the neutral axis of the beam, and w is the displacement in the z-direction. Thus the strain energy density is

$$U_0 = \frac{\sigma_x^2}{2E} = \frac{E}{2}\left(\frac{d^2w}{dx^2}\right)^2 z^2$$

and the strain energy of the bar

$$U = \iiint U_0 dxdydz = \int_0^L \frac{EI}{2}\left(\frac{d^2w}{dx^2}\right)^2 dx$$

The work done by the applied force $q(x)$ is

$$W = \int_0^L q(x)w(x)dx$$

and so the potential energy of the bar is

$$\Pi = \int_0^L \left[\frac{EI}{2}\left(\frac{d^2w}{dx^2}\right)^2 - q(x)w(x)\right] dx \tag{VIII.6}$$

which must be minimised, i.e.

$$\delta\Pi = \delta\int_0^L \left[\frac{EI}{2}\left(\frac{d^2w}{dx^2}\right)^2 - q(x)w(x)\right] dx = 0 \tag{VIII.7}$$

This can be written as

$$\delta\Pi = \delta\int_0^L \left[\frac{EI}{2}\, 2\frac{d^2w}{dx^2}\frac{d^2\delta w}{dx^2} - q\delta w\right]$$

Integrating the first term by parts twice, and using the boundary conditions ($w = w'' = 0$ at $x = 0$ and $x = L$) gives

$$\delta\Pi = \int_0^L \left[EI\frac{d^4w}{dx^4} - q\right]\delta w dx$$

and $\delta\Pi = 0$ implies

$$EI\frac{d^4w}{dx^4} - q = 0$$

which is indeed the governing equation for the beam in equilibrium.

[**Q.VIII.2**] In classical mechanics, the equations of motion for a system are often derived from a quantity, the Lagrangian, which is the difference between the kinetic and potential energies for the system. For a mass on a spring, the Lagrangian is

$$L(y, \dot{y}, t) = \frac{1}{2}m\dot{y}^2 - \frac{1}{2}ky^2$$

with $\dot{y}$ as the velocity. Show that the equation of motion for the spring can be derived from

$$\delta\int L(y, \dot{y}, t)dt = 0$$

VIII.4 Rayleigh-Ritz method

The analytical minimisation via the calculus of variations described in the previous section, is a very powerful tool for deriving fundamental mathematical laws governing the behaviour of elastic systems, and is also used in many other areas of physics. Of more direct practical importance in engineering are the various approximate computational methods which seek the minimum of the internal energy via computational methods. One of these methods is known as the *Rayleigh-Ritz* method, and it is this method which we will explore here. This is just one of a whole class of approximate methods which also includes the methods used in finite element structures codes such as ANSYS.

The Rayleigh-Ritz method assumes that the solution to the problem can be expressed in terms of some series, often a polynomial or a series of sin and cos functions (a fourier series). The series is manipulated so as to make it satisfy the boundary conditions. The coefficients in this series can be determined so as to make the potential energy W for the system a minimum. This is best illustrated by an example. Let us consider again the beam discussed in the previous section, and assume that the displacement w can be written as

$$w(x, C_1, C_2) = C_1 \sin \frac{\pi x}{L} + C_2 \sin \frac{3\pi x}{L} \tag{VIII.8}$$

This expression has the property that $w(x = 0) = w(x = L) = 0$, and that $w''(x = 0) = w''(x = L) = 0$, i.e. it satisfies the boundary conditions. If we substitute this expression into equation (VIII.6) then we obtain an estimate for Π. We can attempt to minimise this estimate by adjusting the coefficients C_1, C_2 in (VIII.8). In fact, the minimum value of Π is given by the values of $C_1, \ldots$ that make the derivatives

$$\frac{\partial \Pi}{\partial C_1} = 0, \qquad \frac{\partial \Pi}{\partial C_2} = 0 \tag{VIII.9}$$

Equations (VIII.9) provide a set of equations that can be solved to find values of C_1 and C_2. The analysis can be done by hand, or MathCad can be used to do the hard work (see associated MathCad workbook), giving values

$$C_1 = \frac{4qL^4}{\pi^5 EI}, \qquad C_2 = \frac{4qL^4}{243\pi^5 EI}$$

Equation (VIII.8), with these values for the coefficients, is then an approximation to the real solution for the problem. If necessary, further terms in the fourier series can be taken to provide higher accuracy.